Rasonic
樂信牌

SMART-FEED

Automatic Pet Feeder

寵物智能餵食器

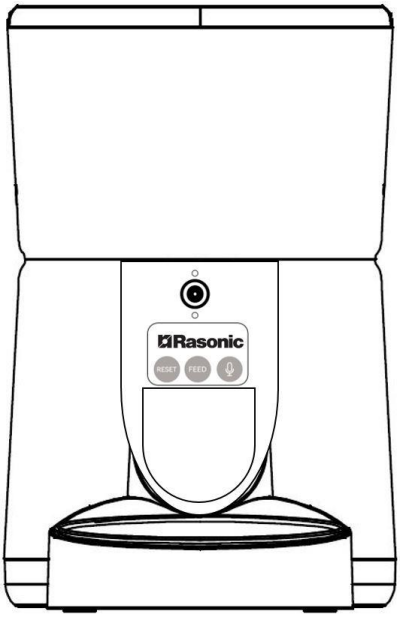

僅供家庭使用

For household use only

使用說明書

OPERATION MANUAL

在使用本產品前，請仔細閱讀此說明書，閱讀後小心保存，以備日後查閱。

Please read the operation manual carefully before using and well keep it in a safe place for future reference.

本說明書中的圖示可能與實物有不同的地方，僅供參考。

Some figures in the manual may not match with the real object, just for reference only.

非常感謝您選購樂信牌寵物智能餵食器，在使用前請先詳細閱讀此說明書，並保存以備日後參考。

目錄

1. 安全注意事項
2. 保養、清潔及儲存
3. 產品規格
4. 產品結構
5. 電源的供應
6. 使用方法
7. 故障排除
8. 特別聲明
9. 售後服務

1. 安全注意事項

使用本產品時，必須遵守下列安全預防措施：

1. 使用前，應將所有包裝物料全部取出並棄掉，以免兒童或寵物當作玩具造成危險。
2. 須使用附送的 USB 電源線及適配器連接電源。
3. 切勿使用有殘缺或鬆動的 USB 電源線及適配器。使用前確保 USB 電源線及適配器已充分抹乾，在插入或拔除適配器時，應用手握穩適配器，不要抓住 USB 電源線。
4. 切勿在 USB 電源線、適配器及產品上放重物或讓其接觸灼熱的表面；切勿夾住、改裝、用力拉扯或扭曲 USB 電源線、適配器及本產品。
5. 切勿在 USB 電源線纏結的情況下連接電源。
6. 切勿將本產品、電池、USB 電源線及適配器浸入水中，或被水濺濕，以免造成觸電的危險。
7. 手濕時切勿安裝配件、接觸、插入或拆除電池、USB 電源線及適配器，否則可構成觸電的危險。
8. **注意！**以防斷電導致產品停止運作，用戶可在產品底部的電池倉內裝上 3 枚 D 型電池。
9. 切勿讓小孩在沒有監督下使用、清潔及維修保養本產品或玩耍器具。將 USB 電源線、適配器及本產品放於小孩不能接觸的地方。
10. 產品只能在室內使用。 切勿在陽光直射的環境中使用。

11. 為避免危險，使用時必須遠離以下地方：
    - 易燃物、噴霧劑及煙劑等周圍
    - 熱源（如散熱器）、火源或直接受陽光照射的地方
    - 近水的環境
    - 大量熱氣、蒸氣或潮濕的地方
12. 本產品可供年齡在 8 歲或以上的兒童及體質、感覺或智力有障礙人士或缺乏經驗和相關知識的人士使用，但他們必須曾經接受負責安全人士的監督或指導如何安全地使用本產品和理解所涉及的危險。
13. 三個月以下的寵物不建議使用本產品。
14. 糧桶不可放置罐頭食物或濕糧。
15. 為避免產品堵塞，切勿使用特殊形狀、帶有孔洞或直徑**超過 12 毫米**的乾糧。
16. 乾糧的形狀和密度會影響糧桶的實際容量，故每份食物的實際重量會有所不同。
17. 應按寵物類型、年齡、行爲或進食習慣等設定本產品。
18. 小心蓋住或隱藏 USB 電源線，以防寵物咬到 USB 電源線造成觸電或破損。
19. 經常檢查本產品、USB 電源線、適配器及電池。為避免危險，如有損壞應立即停止使用，並聯絡信興電器服務中心有限公司進行檢查及維修。
20. 在清潔本產品、安裝或拆卸配件前，應確保 USB 電源線及適配器已從電源插口拔掉並已拆除電池。

21. 切勿將本產品放置於書櫃、壁櫥或其他封閉的空間。確保本產品存放在通風良好的環境。
22. 禁止拆解、撞擊、擠壓或將本產品投入火中。
23. 如用戶要離開一段時間，離開前須更換新電池及檢查電源是否已成功連接，確保本產品有足夠的乾糧及電力維持糧食供應。
24. 應使用鹼性 D 型電池作為後備供電，不應使用充電電池。
25. 切勿握住糧桶頂蓋、糧桶或食物盤底座直接提起本產品，應用雙手托起食物盤底座及主機底座搬運，同時保持本產品處於直立位置。
26. 切勿擅自改裝此產品或使用非生產商提供的零件進行修理，否則可造成危險及維修保養將會無效。
27. 建議一個月更換一次食品級乾燥劑。
28. 為避免糧食堵塞，食品級乾燥劑須放置於糧桶內蓋內。
29. 為防止寵物撲倒本產品，建議放置本產品於角落或靠牆位置。
30. 切勿將寵物乾糧以外的物品放入糧桶中，否則可能會導致產品異常或被寵物誤食。

2. 保養、清潔及儲存

建議用戶定期清潔本產品，否則灰塵及食物殘渣過度積聚，有可能危害寵物健康。

2.1 配件的拆除

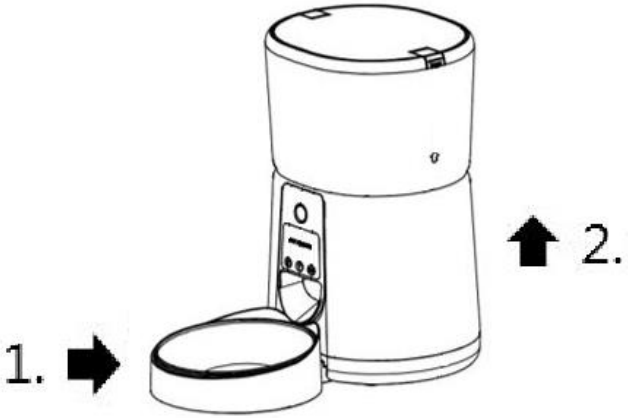

1. 由食物盤底座拆除金屬食物盤，再握緊食物盤底座。

2. 向上提起主機底座，以拆卸食物盤底座。

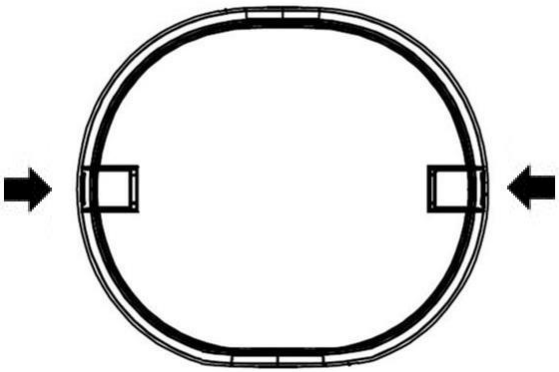

3. 將本產品平穩放置於表面後，同時向內按壓糧桶頂蓋左右的開關，打開糧桶頂蓋，清除糧桶內剩餘的乾糧。

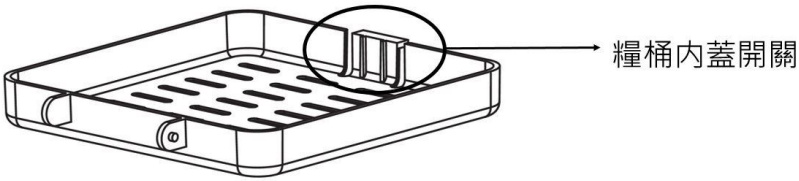

4. 於糧桶頂蓋內，向內按壓糧桶內蓋開關，打開糧桶內蓋，以更換食品級乾燥劑。

5. 拆卸糧桶頂蓋及清除糧桶內的乾糧後，握緊主機機身。

6. 同時握緊糧桶，向上提起以拆除糧桶及主機。

2.2 配件的組裝

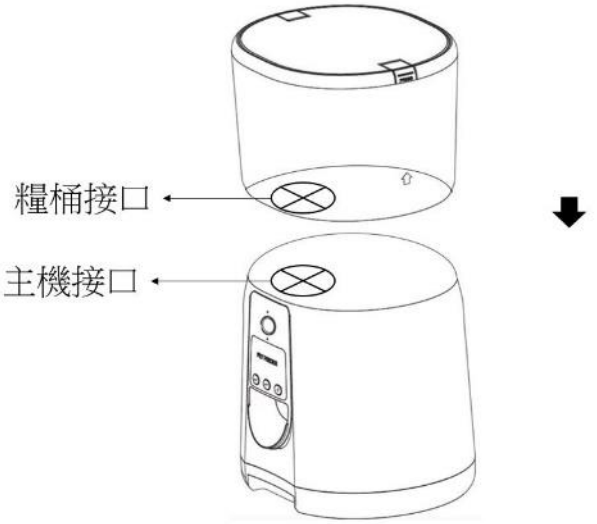

1. 將糧桶接口對準主機接口，將糧桶按箭嘴方向安裝於主機上。

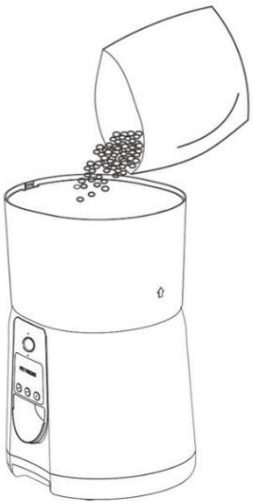

2. 加入寵物乾糧於糧桶內。

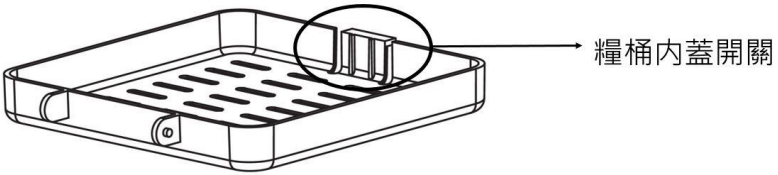

3. 向內按壓糧桶內蓋開關及放置食品級乾燥劑後，關上糧桶內蓋。

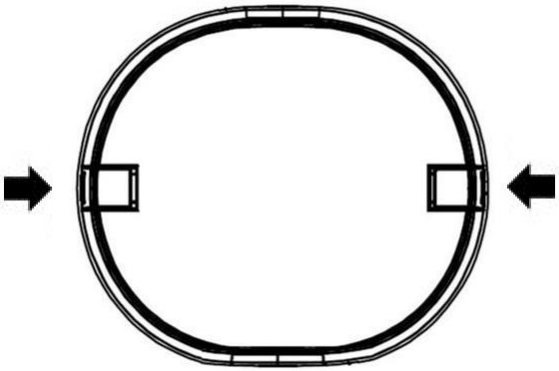

4. 加入乾糧及放置食品級乾燥劑於糧桶內蓋後，如上圖示同時向內按壓糧桶頂蓋左右的頂蓋開關，並將糧桶頂蓋安裝於糧桶上，再鬆開開關。

5. 握緊食物盤底座。

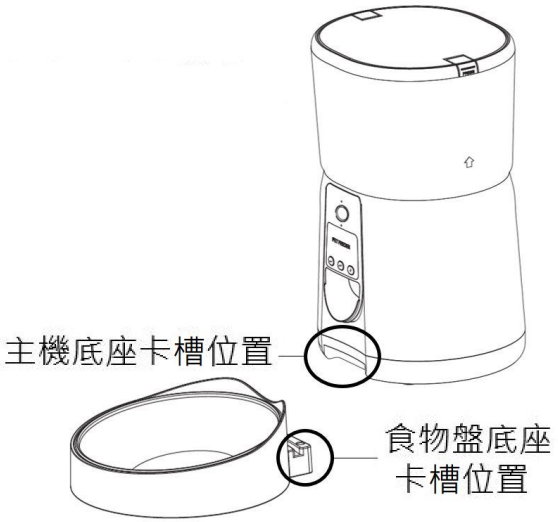

6. 將主機底座卡槽位置對準食物盤底座卡槽位置。
7. 將主機底座安裝於食物盤底座上，並將金屬食物盤放置於食物盤底座上。

2.3 清潔主機及與食物接觸的配件

備注：建議先清除食品級乾燥劑及糧桶內的食物後，再進行主機及配件的清潔及保養。

1. 可用濕軟布清潔主機表面然後抹乾。切勿用水沖洗主機。
2. 可用清水及溫和清潔劑清洗配件。
3. 切勿用天拿水、汽油、去污粉、硬質刷及金屬刷來清潔配件，以免刮花或腐蝕配件表面，致產生異味或滋生細菌。
4. 切勿使用有毒或含腐蝕性清潔劑進行清潔。

5. 清潔前，必須確保產品已關閉、清空乾糧、糧桶內蓋裏的食品級乾燥劑、拆卸配件及電池後進行清潔。
6. 清潔後必須確保配件完全乾燥後再使用，以免食物發霉。

2.4儲存

如長期不使用本產品，應取出剩餘的食物、拔掉 USB 電源線、適配器並拆卸電池。於清潔後，套上塑膠袋，藏於乾爽及避免紫外光直接照射的環境。

3. 產品規格

型號	SMART-FEED
額定電壓/ 電流	5.0 伏特 ⎓ 1.0 安培
額定功率	5 .0 瓦
電源適配器輸入電壓/電流	100-240 伏特~ 0.15 安培
電源適配器輸出電壓/電流	5.0 伏特 ⎓ 1.0 安培
鏡頭分辨率	2 百萬像素
糧桶容量 (約)	3.5 升
產品尺寸 (闊 x 深 x 高) (約)	195 x 325 x 310 毫米
淨重 (約)	1.48 公斤 (包括所有配件)

＊ 本產品可運行時間的長短會因電池溫度及其他使用條件而有所差異。

4. 產品結構

4.1 產品說明

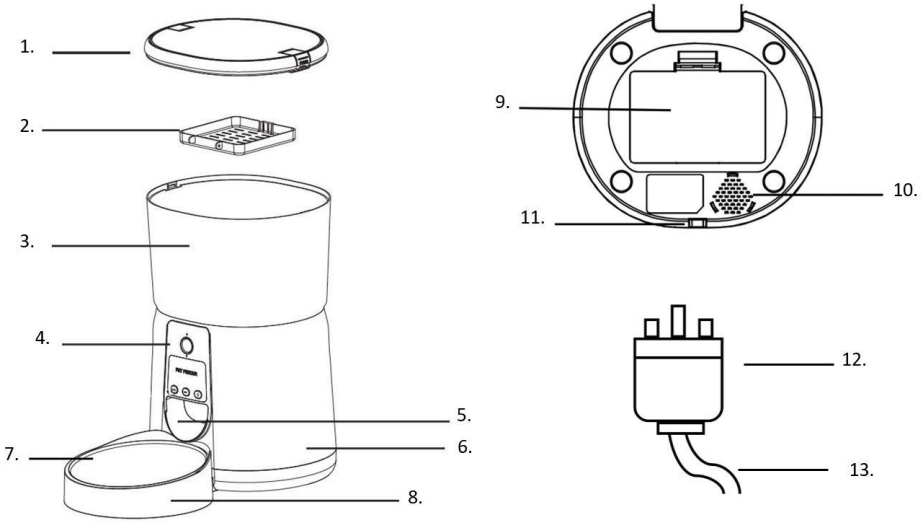

1. 糧桶頂蓋
2. 糧桶內蓋
3. 糧桶
4. 控制面板
5. 糧食出口
6. 主機
7. 金屬食物盤
8. 食物盤底座
9. 電池倉
10. 揚聲器
11. 電源插口
12. 適配器
13. USB 電源線

4.2 控制面板

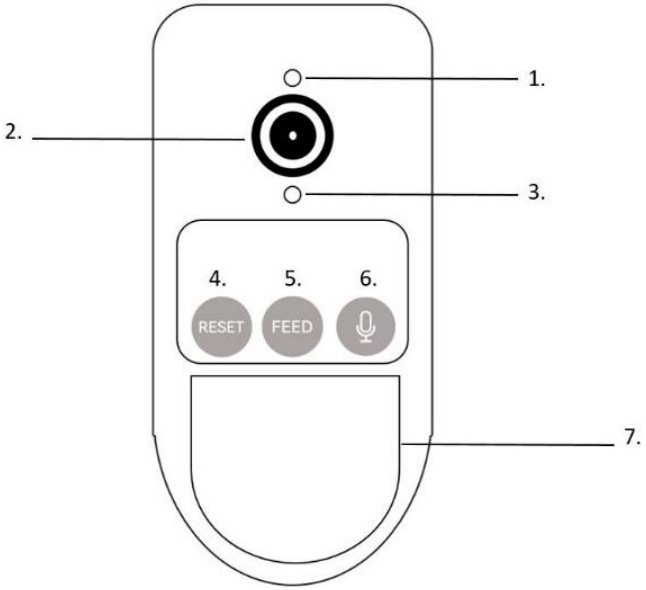

1. 指示燈
2. 鏡頭
3. 收音咪
4. 【重置】鍵
5. 【餵食】鍵
6. 【錄音】鍵
7. 糧食出口

5. 電源的供應

5.1 接通電源

1. 為避免損壞產品，應妥善安裝配件後，再連接電源。
2. 糧桶、糧桶頂蓋、糧桶內蓋、金屬食物盤、食物盤底座與主機的安裝方法，可參考“**章節 2.2 配件的組裝**”。

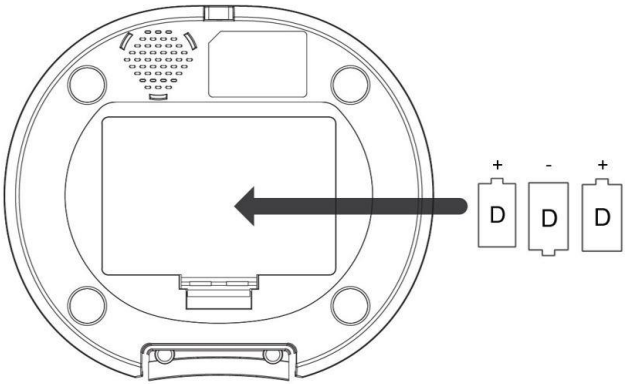

3. 打開電池蓋，將 3 枚 D 型電池安裝於產品底部的電池倉內，作為產品備用電源；蓋上電池蓋後再啓動本產品。
   注意！小心分辨電池正負極指示，切勿弄錯。

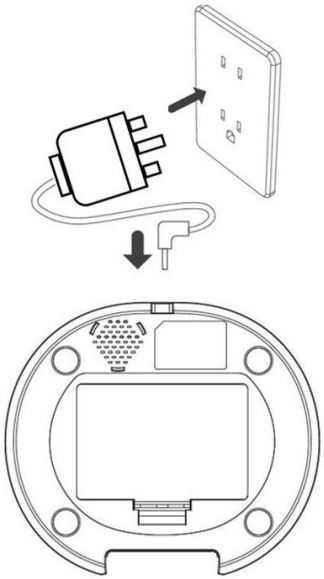

4. 將 USB 電源線一邊連接至主機底部的電源插口，另一邊連接至適配器，再將適配器接駁電源插座，啓動本產品。

5.2 截斷電源

注意！拆除配件前，必須確保本產品已斷開電源。

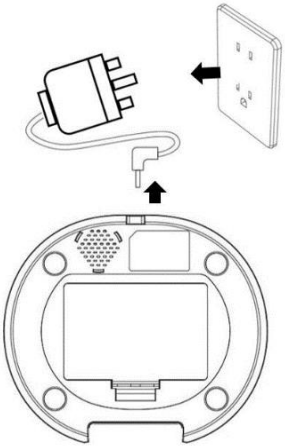

1. 由電源插座拔出適配器，並由主機底部的電源插口拔出 USB 電源線。

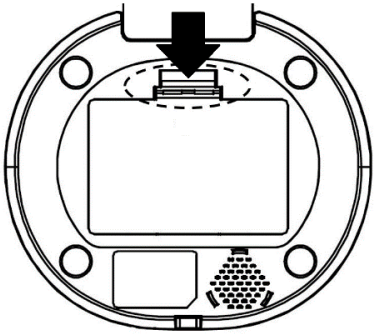

2. 根據箭嘴方向按下主機底部的電池蓋開關，打開電池倉以拆除電池。確保產品已完全斷電後，才可拆卸其他配件。
3. 糧桶、糧桶頂蓋、糧桶內蓋、金屬食物盤及食物盤底座與主機的拆卸方法，可參考“**章節 2.1 配件的拆除**”。

6. 使用方法

6.1 首次使用前

1. 將本產品的包裝物料全部清除。如本產品的外殼上附有包裝袋，須將包裝袋除去後才使用。切勿讓小孩或寵物玩弄包裝袋，否則可能會引致窒息及危險。
2. 徹底檢查本產品及配件有否損壞及裂痕。如有損壞，切勿安裝或使用本產品。
3. 首次使用前，徹底清洗糧桶、糧桶頂蓋、糧桶內蓋、金屬食物盤及食物盤底座等其他配件。

6.2 使用前準備

1. 使用前，建議放置本產品於角落或靠牆位置。並放置於穩固、乾爽、抗熱及防水的表面上，以免發生危險。
2. 連接電源前，須妥善安裝主機與配件，安裝詳情請參考“**章節 2.2 配件的組裝**”。

   注意！以防寵物咬到 USB 電源線造成觸電，須小心蓋住或隱藏 USB 電源線。

6.3 使用説明

1. 打開糧桶頂蓋，將乾燥的寵物乾糧倒入糧桶內。

   注意！切勿放置寵物罐頭食物或其他潮濕的寵物糧食。

   注意！切勿使用特殊形狀或直徑**超過 12 毫米**的乾糧。
2. 在糧桶內蓋內放置食品級乾燥劑。
3. 蓋上糧桶頂蓋後，連接產品電源。
4. 連接電源後，此時藍色指示燈閃亮，產品進入待機模式。

6.4 指示燈狀態説明

指示燈 狀態	藍色指示燈	紅色指示燈
指示燈閃爍	尚未成功綁定應用程式及連接到無線網路	卡糧
指示燈常亮	成功綁定應用程式及連接無線網路	不適用
指示燈快閃兩下	不適用	上鎖或解鎖時

6.5 手動餵糧功能

待機模式下，按一下【餵食】（FEED）鍵可出一份預設份量的糧食，及同時播放錄音兩次（如有）。

注意！手動餵食功能不影響已設定的餵食計劃。

6.6 設定及清除錄音功能

1. 待機模式下，長按【錄音】鍵，產品發出“滴”一聲，表示可開始錄音。結束錄音時再鬆開按鍵，產品會發出“滴滴”聲表示錄音結束。
   注意！最長錄製時間為 10 秒鐘。
   注意！錄音期間不可鬆開按鍵。
2. 若用戶需清除錄音，於待機模式下長按【錄音】鍵，產品發出“滴”一聲後，立即鬆開按鍵。產品會發出“滴滴”聲表示錄音已清除。
   備註：上述方法為以空白錄音取代舊錄音。

6.7 設定及解除安全鎖

1. 待機模式下，長按【餵食】（FEED）鍵 6 秒，紅色指示燈閃亮兩下表示產品已上鎖，主機上所有按鍵將無法運作。
2. 若要解鎖產品，長按【餵食】鍵（FEED）6 秒，紅色指示燈閃亮兩下，表示產品已解鎖。

6.8 恢復原廠設置

待機模式下，長按【重置】（RESET）鍵約 7 秒，產品發出“叮咚”聲，表示產品已恢復原廠設定，並自動重新啓動。

6.9 設備綁定

1. 本產品可綁定於 Rasonic Smart 手機應用程式內，掃描以下二維碼前往 Google play / Apple“App Store”內下載“Rasonic Smart”手機應用程式，註冊賬戶並登錄。

2. 用戶可於本公司網頁 www.rasonic.com 的寵物電器專頁，於 SMART-FEED 寵物智能餵食器的“安裝手冊”中下載有關手機應用程式的使用方法。

7. 故障排除

故障現象	原因	解決方法
產品不能運作。	檢查是否已連接電源。	安裝 3 枚 D 型電池並檢查 USB 電源線及適配器是否完好，以及是否完全插入電源插座。
產品沒有糧食送出或糧食份量與設定不符。	糧食出口是否堵塞或金屬食物盤是否糧食過多。	清理糧食出口及金屬食物盤。
應用程式內顯示產品離線。	產品與路由器距離是否過遠。	產品與路由器相距太遠會令連接不穩定，調整產品與路由器之間的距離於 10 米內及兩者盡量接近。
產品無法與應用程式綁定	是否連接至 5G 無線網絡，或無線網絡的登入賬號及密碼是否帶有中文。	將產品連接 2.4G 的無線網絡及設定無線網絡的登入賬號及密碼不應超過 12 位的數字及英文字母組合。

如使用以上方法仍未能使產品恢復正常操作，切勿嘗試自行維修。應聯絡信興電器服務中心有限公司進行檢查及維修。

8. 特別聲明

1. 本資料上所有內容經過核對，如有任何印刷及內容上的誤解，本公司將保留解釋權。
2. 本產品若有技術改進，會編進新版說明書中，恕不另行通知；產品外觀、規格如有改動，則以製造商資料為準。
3. 如本資料之中英文版本有差異時，應以中文版為準。
4. 使用說明書的電子副本可以通過電子郵件發送致客戶，如有需要，可致電信興電工工程有限公司：2861 2767。

9. 售後服務

1. 由購買收據日期起之一年保修期內，經信興電器服務中心有限公司之服務人員證實產品故障屬於正常使用之情況下發生者，本公司將提供免費維修或更換零件服務。經更換之任何損壞零件，將歸屬本公司所有。保修範圍不包括修理或更換產品之損耗性零件等。
2. 用戶必須於維修時出示購買收據／換購收據及蓋有銷售點／換購中心印章的產品保修記錄卡。如有任何疑問，請致電信興電器服務中心有限公司熱線：2406 5666查詢。

Thank you for choosing Rasonic Automatic Pet Feeder. Read the operation manual carefully before use and keep it for your future reference.

Table of Contents

1. Important Safeguards
2. Maintenance, Cleaning and Storage
3. Product Specifications
4. Product Descriptions
5. Power Connection
6. Operation Instructions
7. Troubleshooting
8. Special Avowal
9. After Sales Service

1. Important Safeguards

When using the appliance, please follow below safety precautions:

1. Remove and discard all packing materials of the appliance. Make sure children and pet do not play with them to avoid any danger.
2. Use the provided USB power cord and adapter to connect the appliance.
3. Never use deficient or loosen USB power cord and adapter. Make sure the USB power cord and adapter are dry before use and inserted firmly when use. Always hold the adapter tightly with hands when insert or remove it. Do not grasp USB power cord.
4. Do not place heavy objects on the USB power cord, adapter and the appliance or let it touch any hot surface. Never clip, modify, stretch or twist the USB power cord, adapter and the appliance.
5. Do not use the USB power cord when it is tangle.
6. Never immerse the appliance, battery, USB power cord and adapter into water or let them wet, it is to avoid electric shock.
7. To avoid electric shock, never assemble accessories, touch, plug or unplug the battery, USB power cord and adapter with wet hands.

8. **CAUTION!** To avoid suspension of electricity supply, user can install 3 D-type batteries in the battery compartment at the bottom of the appliance.
9. Children shall not play with the appliance. Using, cleaning and maintenance shall not be made by children without supervision. Put the appliance and its USB power cord and adapter in a place not reachable by children.
10. The appliance is intended for indoor use only. Do not use the appliance in an environment exposed to direct sunlight.
11. To avoid danger, never use the appliance near the environment of:
    - Flammable materials, sprays and aerosols
    - Heat source (e.g. radiator), fire or expose under direct sunlight
    - Near water
    - Massive hot air, steam or humid area
12. The appliance can be used by children aged from 8 years and above and person with reduced physical, sensory or mental capabilities, or lack of experience and knowledge, if they have been given supervision or instruction concerning use of the appliance in a safe way and understand the hazards involved.
13. The appliance is not recommended for pets that are under 3 months old.
14. The grain bucket cannot fill canned food or wet food.

15. To avoid clogging the appliance, do not use grain with special shapes, holes or diameters exceeding 12 mm.
16. The shape and density of grain will affect the actual capacity of the grain bucket. And actual weight per serving will vary due to different grain densities.
17. Set the appliance according to the breeds, age, behavior or eating habits of your pet.
18. To avoid electric shock or damage, please cover or hidden the USB power cord.
19. Always check the condition of the appliance, USB power cord, adapter and battery. To avoid hazards, please stop using immediately if any damage is found. Please contact Shun Hing Electric Service Centre Limited for checking and repairing.
20. Remove the adapter and USB power cord, detach battery from the socket before cleaning the appliance, installing, or removing the accessories.
21. Do not place the appliance in a bookcase, built-in cabinet or in any confined space. Make sure the appliance stored in a well-ventilated environment.
22. Do not disassemble, impact, crush or throw the appliance into fire.
23. If the user will be away for a long time, replace the battery with a new one and check whether the power supply has been successfully connected before leaving. Ensure sufficient food and power to feed the pets.

24. Use alkaline D-type batteries for power supply. Do not use rechargeable batteries.
25. Do not directly lift the appliance by the upper lid, the grain bucket itself, or the base of the food tray. Lift the food tray base and the main body base with both hands while keeping the appliance in an upright position.
26. Do not attempt to modify the appliance by yourself or repair with any parts that are unauthorized, otherwise it may cause hazards and warranty becomes invalid.
27. It is recommended to replace the food-grade desiccant once a month.
28. To prevent the appliance blockage, place the food-grade desiccant inside the inner lid of the grain bucket.
29. To prevent pets from knocking over the appliance, it is recommended to place the appliance in a corner or against a wall.
30. Do not put items other than dry pet food into the grain bucket, as it may cause appliance malfunctions or be mistakenly ingested by pets.

2. Maintenance, Cleaning and Storage

It is recommended that users clean this appliance regularly, as excessive accumulation of dust and food residue could potentially harm the health of pets.

2.1 Disassembly accessories

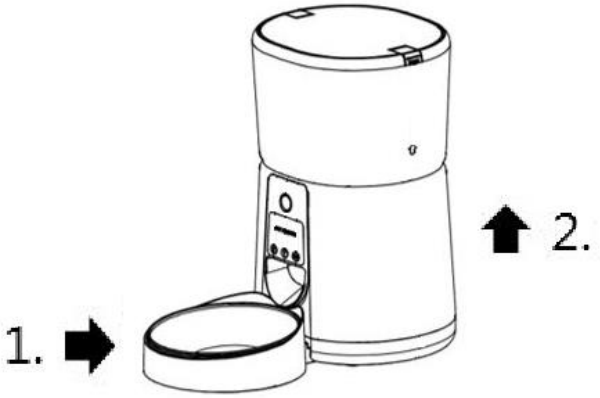

1. Take off the metal food tray and hold the base of the food tray firmly.
2. Simultaneously lift the main body base while disengaging the locking positions between the food tray base and the main body base.

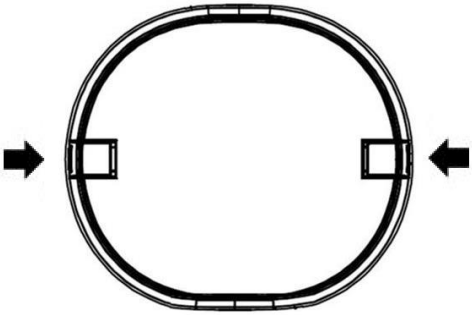

3. After removing the base of the food tray and placing the main body on a flat surface, simultaneously press inward on the upper lid open button of the grain bucket to open it. Clean out any remaining food inside the grain bucket.

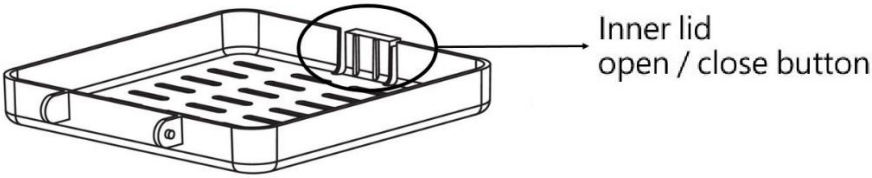

4. Inside the upper lid of the grain bucket, press inward on the inner lid button to open it and clean out the food-grade desiccant.

5. After removing the lid of the grain bucket and cleaning out the dried food inside, hold the main body firmly.

6. Simultaneously grip the grain bucket and the main body, and lift them apart.

2.2 Assembly accessories

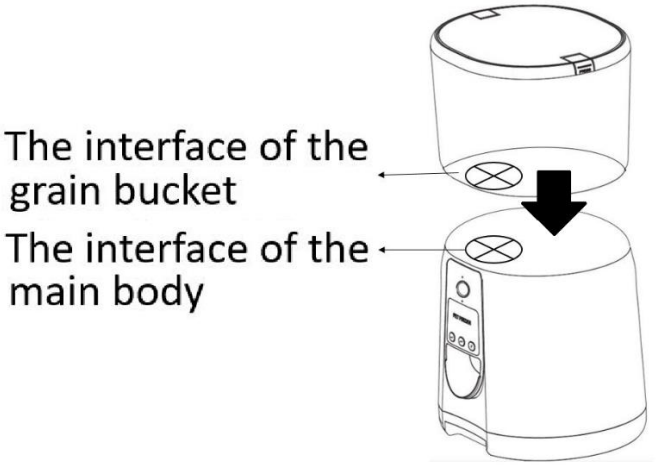

1. Align the interface of the grain bucket with the interface of the main body, and install the grain bucket onto the main body in the direction indicated by the arrow.

2. Fill the dry pet food to the grain bucket.

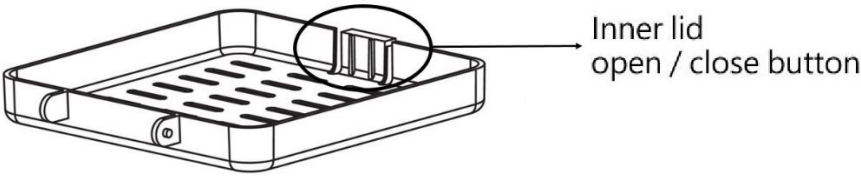

3. Press inward on the inner lid button of the grain bucket to open the inner lid and place the food desiccant inside and close the inner lid switch of the grain bucket.

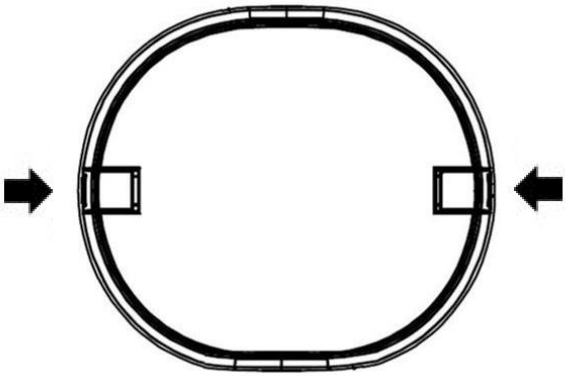

4. After filling the dry food and placing the food-grade desiccant on the inner lid of the grain bucket, press inward on both sides of the upper lid button, and install it onto the grain bucket and release the button.
5. Hold the base of the food tray firmly.

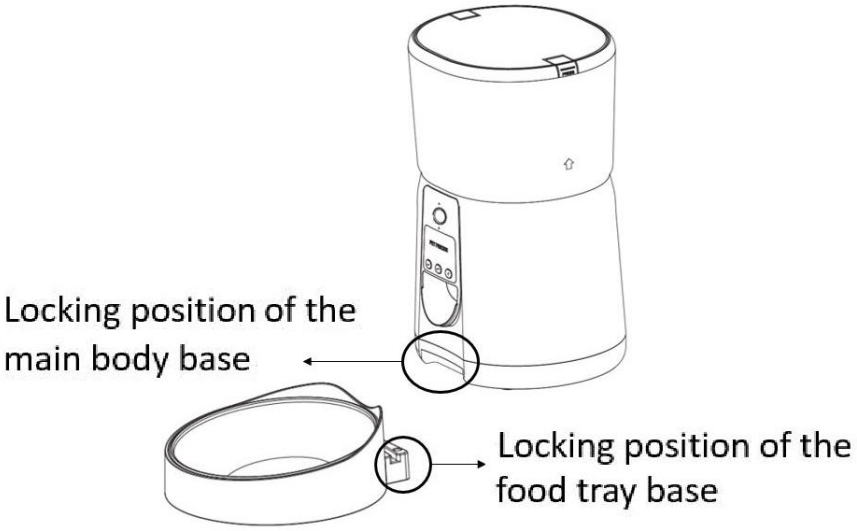

6. Align the locking positions of the main body base with those of the food tray base.
7. Install the main body base and place the metal food tray on food tray base.

2.3 Cleaning of main body and food contact accessories

Note: It is recommended to empty the food desiccant, remove the food from the grain bucket before cleaning and maintaining the main body and accessories.

1. Clean the surface of the main body with a damp, soft cloth. Do not rinse the main body with water.
2. Clean the accessories with water and mild detergent.
3. Do not use lacquer thinner, gasoline, decontamination powder, hard brush or metal brush to clean the accessories, so as to avoid scratching and corroding the surface of the parts, resulting in odor or breeding of bacteria.
4. Do not use toxic or corrosive cleaning agents.
5. Before cleaning, make sure the appliance is power off, food desiccant, food in grain bucket, accessories and batteries are removed.
6. After cleaning, to avoid food from getting moldy, make sure the accessories are completely dry before using.

2.4 Storage

If you have not used this appliance for a long time, please unplug the adapter, and USB power cord, remove pet food and batteries. Put it in a plastic bag after cleaning, and store it in a dry place and avoid direct ultraviolet light.

3. Product Specifications

Model no.	SMART-FEED
Rated Voltage/ Current	DC 5.0V ⎓ 1.0A
Rated Power	5.0W
Adapter Input Voltage / Current	100-240V~ 0.15A
Adapter Output Voltage / Current	5.0V ⎓ 1.0A
Camera Resolution	2 Mega Pixels
Grain Bucket Capacity (Approx.)	3.5L
Product Size (WxDxH) (Approx.)	195 x 325 x 310 mm
Net Weight (Approx.)	1.48 kg (Including accessories)

* The length of operation time can be varied depending on the temperature of the battery and other usage conditions.

4. Product Descriptions

4.1 Product Description

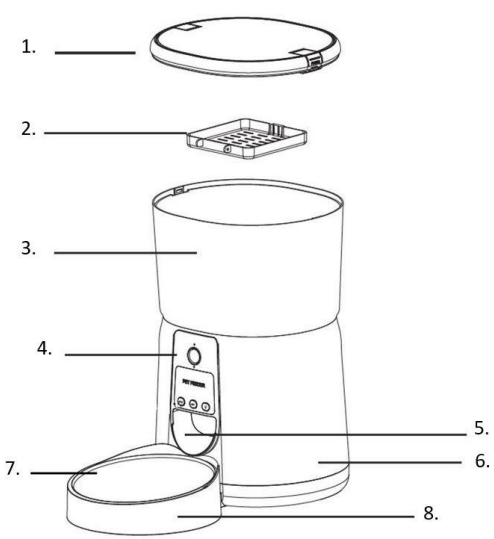

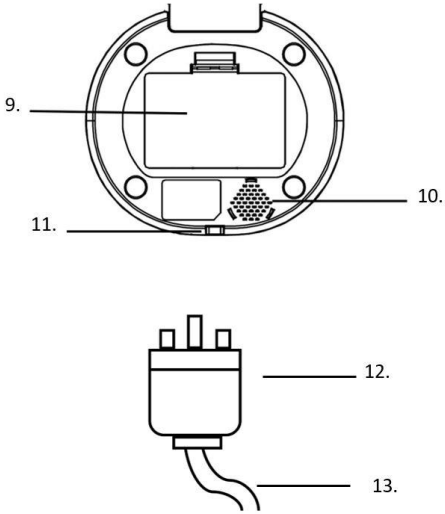

1. Grain bucket upper lid
2. Grain bucket inner lid
3. Grain bucket
4. Control Panel
5. Food outlet
6. Main body
7. Metal food tray
8. Food tray base
9. Battery compartment
10. Speaker
11. Power socket
12. Adapter
13. USB power cord

4.2 Control Panel

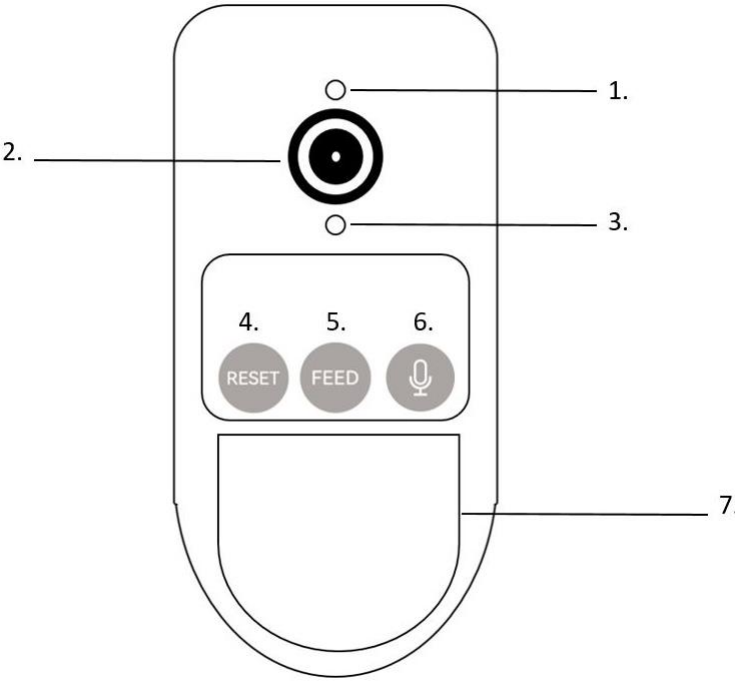

1. Indicator Light
2. Camera
3. Mic
4. 【RESET】 button
5. 【FEED】 button
6. 【Recording】 button
7. Food outlet

5. Power Connection

5.1 Connecting power

1. To avoid damaging the appliance, please assembly the accessories properly before connecting the power.

2. For the assembly grain bucket, grain bucket upper lid, grain bucket inner lid, metal food tray and food tray base with the main body, please refer to **Chapter 2.2 Assembly accessories.**

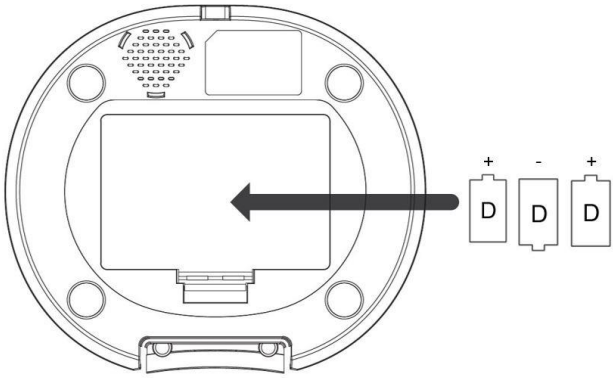

3. Open the battery cover and insert three D-size batteries as backup power in the battery compartment, then close the battery cover.

CAUTION! Be careful to distinguish between the positive and negative terminals of the batteries, and do not install them incorrectly.

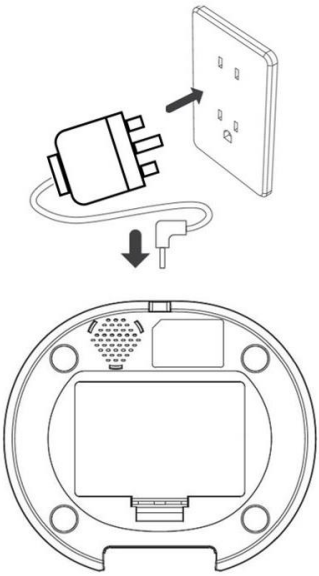

4. Connect the USB power cord to the adapter and the power socket of the main body, then connect the power to power up the appliance.

5.2 Cutting off power

CAUTION! Before removing all the accessories, make sure the appliance is disconnected from the power source.

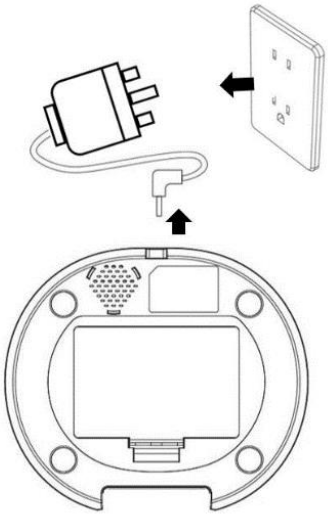

1. Remove the USB power cord from the adapter and power socket to disconnect the power.

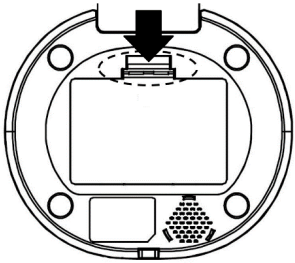

2. Press the battery cover lock at the bottom of the main body in the direction indicated by the arrow to remove the backup batteries. Make sure the appliance is power off before removing other accessories.

3. For the disassembly methods of the grain bucket, upper lid, inner lid, metal food tray and food tray base with the main body, please refer to **Chapter 2.1 Disassembly accessories.**

6. Operation Instructions

6.1 Before First Use

1. Remove all packaging materials from the appliance. If there is a packaging bag attached to the outer shell of the appliance, please remove it before use. Do not let children or pets play with the packaging bag, as it may cause suffocation and danger.
2. Thoroughly check the appliance and accessories for any damage or cracks. Do not assembly or use the appliance if there is any damage.
3. Before the first use, clean the surface of the main body and interface of the main body with a damp cloth. Other accessories such as the grain bucket, grain bucket upper lid, grain bucket inner lid, food tray base, and metal food tray can be cleaned with a neutral detergent.

6.2 Before use

1. Before use, it is recommended to place the appliance in a corner or against a wall. Place it on a stable, dry, heat-resistant, and waterproof surface to prevent accidents.
2. Before connecting the power, please assembly the main body and accessories properly. Details refer to **Chapter 2.2 Assembly accessories**.
   CAUTION! To prevent pets from biting the USB power cord and causing electric shock, be careful to cover or hide the USB power cord.

6.3 Operation instructions

1. Open the grain bucket upper lid and fill the dry pet food into the grain bucket.
   CAUTION! Do not fill cans of pet food or other wet pet food in the grain bucket.
   CAUTION! Do not use special-shaped or **larger than 12mm diameter** dry pet food.
2. Place the food-grade desiccant inside the inner lid of the gain bucket.
3. Close the upper lid of the grain bucket and connect the power.
4. After connecting the power, the blue indicator light will turn on, and the appliance will enter standby mode.

6.4 Indicator light instructions

Indicator light / Status	Blue indicator light	Red indicator light
Flash	Did not successfully connect to the APP and Wi-Fi	The appliance jammed food
Stay on	The appliance successfully connects to the APP and Wi-Fi	N/A
Flash twice	N/A	The appliance been locked or unlocked

6.5 Feeding with manual mode

1. In standby mode, pressing the【FEED】button once. The appliance will dispense a default amount of food and play the recording twice if any.
   CAUTION! This action does not affect the previously set feeding schedule.

6.6 Setting or deleting recording

1. In standby mode, press and hold the【Recording】button. The appliance will emit a single "beep" sound to start recording. Release the button after finished the recording, and the appliance emits "beep beep" sounds to end the recording.

CAUTION! The longest recording time is 10 seconds.

CAUTION! Do not release the button during the recording.

2. If the user wants to delete the recording, in standby mode, press and hold the 【Recording】button. The appliance will emit a single "beep" sound, and release the button immediately. The appliance will emit "beep beep" sounds to show that the recording has been deleted.

NOTE: The above method is to replace the old recordings with blank recording.

6.7 Setting and disabling the safety lock

1. In standby mode, press and hold the【FEED】button for 6 seconds. The red indicator light will flash twice indicating that the appliance is locked. At this time, the buttons on the main body will not function.
2. To unlock the appliance, press and hold the【FEED】button for 6 seconds. The red indicator light will flash twice, indicating that the appliance is unlocked.

6.8 Factory Reset

1. In standby mode, press and hold the【RESET】button for around 7 seconds. The appliance will emit a "ding-dong" sound indicating that it has been restored to factory settings and will reboot the appliance.

6.9 Bind Device

1. The appliance can be bounded with “Rasonic Smart” APP. Scan the QR code below, or download the “Rasonic Smart” APP from “Google Play” or “App Store”. After installation, register a new account and log in accordingly.

2. User can download the instructions on how to use the mobile APP from the "Installation Guide" of the SMART-FEED Automatic Pet Feeder on the pet appliance page via our homepage www.rasonic.com.

7. Troubleshooting

Problem	Reason	Solution
The appliance does not work.	Check if the power is connecting.	Install three D-type batteries and check if the USB power cord and adapter are in good condition and fully inserted into the socket.
The appliance does not dispense food or the amount of food dispensed does not match the settings.	The food outlet is blocked or there is an excessive amount of food on the metal food tray.	Clean the food outlet and the metal food tray.
APP displays the appliance "Offline."	The appliance is too far from the router causing an unstable connection between the appliance and the router.	The appliance is too far from the router. Adjust the distance between the appliance and the router to be within 10 meters and ensure they are in close proximity to each other.

The appliance cannot be bound to the APP.	The login account and password for the wireless network or 5G wireless network contain Chinese characters.	Connect to a 2.4G wireless network and set the login account and password for the wireless network using a combination of numbers and English letters, not exceeding 12 characters.

*If the above solutions cannot fix the problem, do not attempt to repair the appliance by yourself and please contact Shun Hing Electric Service Centre Ltd. to check and repair.

8. Special Avowal

1. The content in the operation manual has been checked. Our company reserves the hermeneutic power to any printing errors or misunderstanding on the content.
2. If there are technical improvements on the appliance, the operation manual will be updated in new version without prior notice. The appliance appearance and specification are subject to the manufacturer information.
3. In case there is any inconsistency or conflict between the English versions and Chinese versions of the terms, the Chinese versions shall prevail.
4. The e-copy of user manual can be sent by email on requested. For enquiries, please call Shun Hing Electric Works & Engineering Co., Ltd. hotline at 2861 2767.

9. After Sales Service

1. For any defect, in the judgement of technician from Shun Hing Electric Service Center Limited, caused under normal use, our company is responsible for repairing or replacing parts of the said electrical appliance free of charge within one year guarantee period commencing from the date of purchase. Any defect part which has been replaced shall become our property. Guarantee service does not cover the repair or replacement of consumable parts etc.
2. User must present the official invoice/redemption voucher and the appliance warranty card with the chop from sales point/redemption center for maintenance. For enquiries, please call Shun Hing Electric Service Center Limited hotline at 2406 5666.

NOTE

信興電工工程有限公司
SHUN HING ELECTRIC WORKS AND ENGINEERING CO., LTD.
辦公室：香港九龍尖沙咀東部麼地道67號半島中心9樓
電話：2861 2767　　圖文傳真：2865 6706
網址：http://www.rasonic.com　　電郵：shew@shunhinggroup.com
Office: 9/F, Peninsula Centre, 67 Mody Road, Tsimshatsui East, Kowloon, H.K.
Tel: 2861 2767　　Fax: 2865 6706
Website: http://www.rasonic.com　　E-mail: shew@shunhinggroup.com

保養及維修 Maintenance and Repair Service:

信興電器服務中心有限公司
SHUN HING ELECTRIC SERVICE CENTRE LTD.
香港新界葵湧勝耀街2號信興中心11樓
電話：2406 5666　　圖文傳真：2408 0316
網址：http://www.shesc.com/zh
11/F, Shun Hing Centre, 2 Shing Yiu Street, Kwai Chung, N.T. H.K.
Tel: 2406 5666　　Fax: 2408 0316
Website: http://www.shesc.com/en

客戶服務中心

香港新界葵湧勝耀街2號信興中心1樓
九龍尖沙咀東部麼地道67號半島中心B座9樓
香港天后琉璃街7號柏景中心22樓
澳門慕拉士大馬路193-199號南嶺工業大廈5樓I座

Customer Service Centre

1/F, Shun Hing Centre, 2 Shing Yiu Street, Kwai Chung, N.T.
9/F, Block B, Peninsula Centre, 67 Mody Road, Tsim Sha Tsui East, Kowloon
22/F, Parkview Centre, 7 Lau Li Street, Tin Hau, Hong Kong
Avenida de Venceslau de Morais, No. 193-199,5 andar - 1, Edf. Industrial Nam Leng, Macau

有關最新之香港及澳門客戶服務中心資料，請參閱信興服務中心網址：
http://www.shesc.com/zh
For the latest information of Hong Kong and Macau service center, please visit
http://www.shesc.com/en

RPP-D1123